DIEHL
Metering

IZAR STELLA MOTION

SYSTEM

APPLICATION

IZAR STELLA MOTION is a mobile gateway device specifically designed to collect meter readings and alarm data from IZAR STELLA MIU devices. IZAR STELLA MOTION can be quickly deployed in any type of vehicle. IZAR STELLA MOTION collects the IZAR STELLA MIU data and transfers it to IZAR@NET 2 management software.

FEATURES

- Two-way LoRa® communication with IZAR STELLA MIU
- Secured communication between IZAR STELLA MOTION and IZAR@MOBILE 2
- Supports parameter configuration Over The Air (OTA)
- Supports firmware upgrade OTA
- REST API over Wi-Fi, Bluetooth® or Ethernet
- Complies with FCC part 15

OPERATING PRINCIPLE

IZAR STELLA MOTION communicates via LoRa® to the IZAR STELLA MIU to receive metering and alarm data for transfer to the IZAR@NET 2 software solution. IZAR@NET 2 enables the processing and analysis of the collected data.

TECHNICAL DATA

		IZAR STELLA MOTION
Housing		Rugged suitcase with removable components
Frequency	MHz	902 ... 928
Communication protocols		LoRa®
Connectivity		WiFi 802.11ac, Bluetooth®
Power supply		External connector for powering from the vehicle (+9 ... +17 VDC)

AMBIENT CONDITIONS

		IZAR STELLA MOTION
Operating temperature	°F	-4 ... 158
Storage temperature	°F	-4 ... 158
Ambient humidity	%	20 ... 90 (non-condensing)

DIMENSIONS

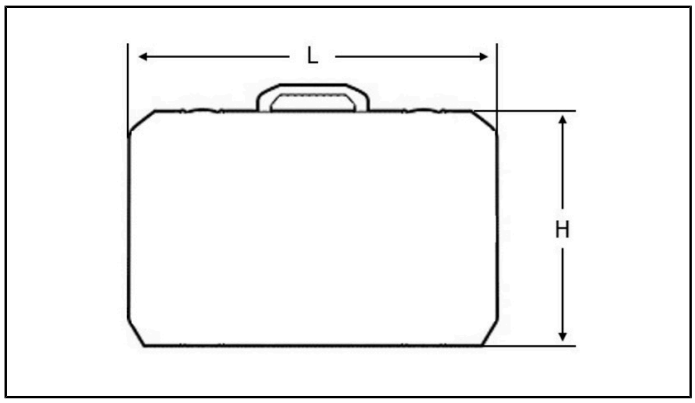

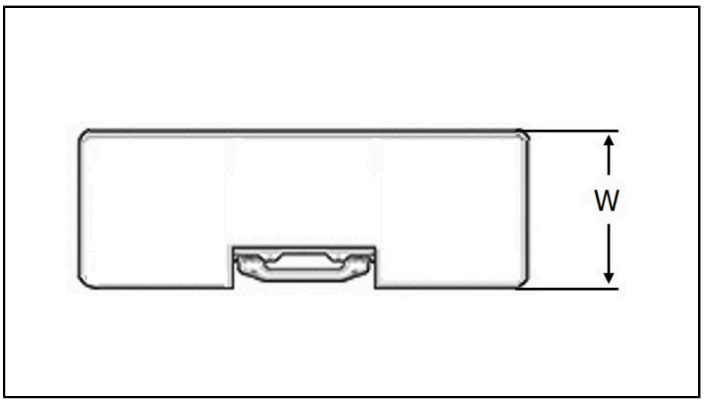

			IZAR STELLA MOTION
Length	L	inch	17.6
Width	W	inch	7.0
Height	H	inch	11.7

Economic Actor Information

Applicable regulation and legal obligations for products may change.

DIEHL METERING monitors applicable regulation to ensure their products comply at the date of placing on the market.

Each economic actor making products available on the market thereafter must independently keep informed about the current applicable regulation.

For questions, please contact: metering-germany-info@diehl.com

Diehl Metering LLC, U.S.A
2200 Western Court, Suite 110
IL 60532 Lisle
United States of America
Phone: +1 (331) 204-6540
metering-usa-info@diehl.com
www.diehl.com/metering

EMPOWER A SUSTAINABLE FUTURE