DIEHL
Metering

IZAR RC 868 I MIOTY

RADIO | RADIO MODULE



APPLICATION

IZAR RC 868 i mioty is designed to transmit mechanical meter data via an unidirectional link, in mobile mode and fixed network. It can be field or factory programmable.

Easy to fit, the IZAR RC 868 i mioty module can be clipped onto all the meters of the Diehl Metering inductive modular range (Ha+Ti or Ti), with a grey or red ring. It comprises a tamper-proof sensor operating on inductive principle.

It offers multiple functions (current index, index at anniversary date...) and alarms (detailed leaks, meter blocked, low battery...).

FEATURES

- Compact radio emitter, mioty® for Metering for Fixed Network and wMBus OMS Gen3 for Mobile Reading
- Suitable for mobile reading and long range fixed network
- IP 68
- Lifetime up to 15 years
- Insensitive to magnetic fraud
- Local interface for configuration

PRINCIPLE OF OPERATION

IZAR RC 868 i mioty includes an electronic circuit that collects the data coming from a Diehl Metering water meter.

Mobile reading in walk-by:
The data sent by IZAR RC 868 i mioty is collected using either a handheld computer or tablet equipped with an IZAR RDC Motion in walk-by. Data is then transferred directly to a centralized monitoring system.

Fixed network:
A fixed receiver IZAR IoT GATEWAY Compact or IZAR IoT GATEWAY Premium installed in a fixed location will collect the data and send it at predefined intervals, via GPRS or LAN, to an IZAR PLUS PORTAL and IZAR@NET.

TECHNICAL DATA

		IZAR RC 868 i mioty
Communication protocol		wMBus T1-mode OMS Gen 3 and mioty® for Metering L1C
Frequency	MHz	868.95 wMBus T1-mode and 868.18 mioty® for Metering
Modulation		(G) MSK for L1C and FSK for wMBus
Transmission power	mW	16
Transmission mode		Unidirectional
Radio range		Up to 500 m (T1 mode) and 5 km (mioty® for Metering mode) depending on the environnement
Approval		EN 300 220, CE, RED directive, EN 13757-3/-4-7
Power supply		Lithium 3.6 V
Battery lifetime		Up to 15 years*
Frame encryption		AES 128-CBC

* Standard conditions of use and specified temperatures. Theoretical lifetime depends on usage profile, with no guarantee

AMBIENT CONDITIONS

		IZAR RC 868 i mioty
Operating temperature range	°C	-15...+55
Storage temperature range	°C	-20...+70
Ambient humidity	%	0...100
Protection class		IP 68

CONFIGURATION

	IZAR RC 868 i mioty
Local Interface	IrDA
Alarms management	Leak detection | Meter blocked | Overflow | Underflow | Backflow | Sensor fraud | Mechanical fraud | Low battery power | Detailed leakage information (Cumulated number of days | Cumulated leakage volume | Number of event | Event number of days | Cumulated number of days)
Functions	Current index

COMPATIBILITY

	IZAR RC 868 i mioty
Meters	Diehl Metering inductive modular range Ha+Ti or Ti (grey or red ring). Pulse weight DN 15 to DN 40 (1 liter) | Pulse weight DN 50 to DN 125 (10 liters) | Pulse weight DN150 to 300 (100 liters)

DIMENSIONS

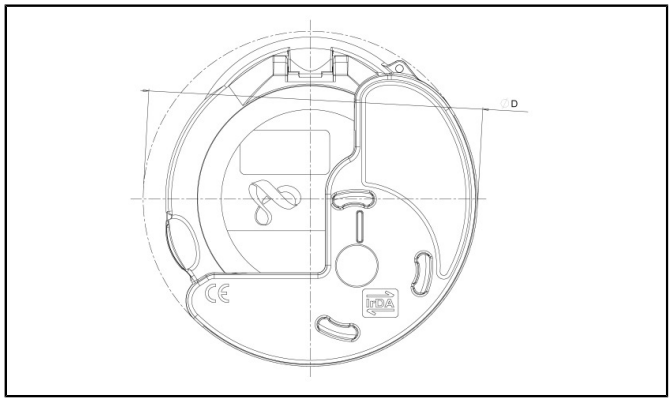

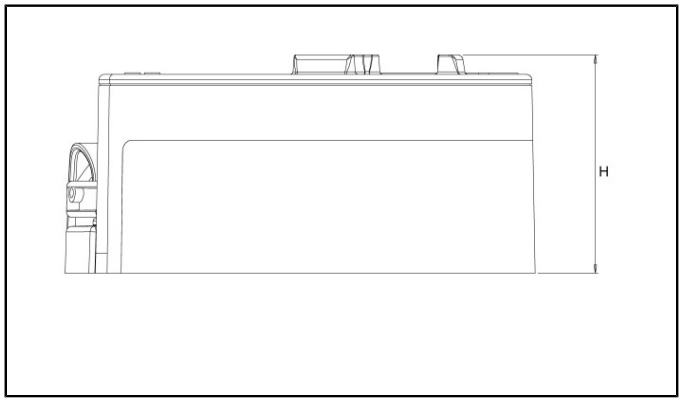

			IZAR RC 868 i mioty
Diameter	D	mm	90
Height	H	mm	40

PROFILE OVERVIEW

	Fixed Network (AMI)	Mobile frame (AMR)	Mobile details	Battery lifetime
Walk-by profile	1 frame / hour	1 frame / 64 s	-	13 years*
Passive drive-by profile	1 frame / 4 hours	1 short frame / 22 s	Long frame / 2 mins 12 s	15 years*
Drive-by profile	1 frame / 4 hours	1 short frame / 16 s	Long frame / 1 min 36 s	12 years*

* Standard conditions of use and specified temperatures, with no guarantee

Economic Actor Information

Applicable regulation and legal obligations for products may change.

DIEHL METERING monitors applicable regulation to ensure their products comply at the date of placing on the market.

Each economic actor making products available on the market thereafter must independently keep informed about the current applicable regulation.

For questions, please contact: metering-germany-info@diehl.com

Diehl Metering GmbH
Donaustraße 120
90451 Nürnberg
Germany
Phone: +49 911 6424-0
metering-germany-info@diehl.com
www.diehl.com/metering

EMPOWER A SUSTAINABLE FUTURE