DIEHL
Metering

CORONA MWI

Multi-Jet Meter | Wet Runner

APPLICATION

Domestic water meter

FEATURES

Modular multi-jet domestic meter with inductive scanning (without magnetic influence)System capability, with standard applicable pulse output DN15-20(25) 1l/pulse, DN25-50 10l/pulse(inductive). CORONA MWI can be externed in any way - with IZAR RADIO COMPACT 868 I (radio module), IZAR PULSE I (pulse transmitter) or IZAR M-BUS COMPACT IExtremely low pressure loss and considerably extended measuring rangeRecords very small amounts of water consumptionMaximum long-term accuracy and absolutely corrosion-resistantMeasuring data better than specified by calibration regulationsStrainer insert in inlet connection for cleaning without damaging the sealCapable of withstanding any load for a short timeFine adjustment by regulating plug

GENERAL

			Meter for horizontal pipes
Medium temperature range		°C	0.1 ...+30
Temperature safety		°C	0.1 ... +50
Ambient operating temperature		°C	0.1 ... +55
Ambient storage temperature		°C	0.1 ... +55
Nominal pressure	PN	bar	16
Display range			0.05 ... 99,999 m^3
Protection class			IP 68

TECHNICAL DATA

Nominal diameter	DN	mm	15	20	20	25	25
Permanent flow rate	Q_3	m^3/h	2.5	4	4	4	6.3
Overload flow rate	Q_4	m^3/h	3.125	5	5	5	7.87
Transitional flow rate	Q_2	l/h	40	40	40	40	100
Minimum flow rate	Q_1	l/h	25[1]	25[2]	25[2]	25[2]	63[1]
Starting flow rate		l/h	4	4	4	4	6-8
Pressure loss at Q_3		bar	0.36	0.47	0.47	0.47	0.6
Flow rate at 1 bar pressure loss		m^3/h	4.19	5.85	5.85	6.5	12

Nominal diameter	DN	mm	25	25	32	40	50(40[5])
Permanent flow rate	Q_3	m^3/h	10	10	10	16	16
Overload flow rate	Q_4	m^3/h	12.5	12.5	12.5	20	20
Transitional flow rate	Q_2	l/h	100	100	100	256	256
Minimum flow rate	Q_1	l/h	62.5[2]	62.5[2]	62.5[2]	160[1]	160[1]
Starting flow rate		l/h	6-8	6-8	6-8	20-25	20-25
Pressure loss at Q_3		bar	0.6	0.6	0.6	0.6	0.6
Flow rate at 1 bar pressure loss		m^3/h	12	12	12	20	20

[1] based on dynamic R 100
[2] based on dynamic R 160

APPROVAL

Nominal diameter	DN	mm	15	20	20	25	25
Permanent flow rate	Q_3	m^3/h	2.5	4	4	4	6.3
MID approval number			LNE 32390	LNE 32390	LNE 32390	LNE 32390	TH-8814 / TH-8811
Approval typ name			D3	D3	D3	D3	D4 / Corona D4
Sanitary conformity			AoC DEU	AoC DEU	AoC DEU	AoC DEU	AoC DEU
Dynamic range horizontal installation (Q_3/Q_1)	R		40 / 80 / 100	40 / 80 / 100 / 160	40 / 80 / 100 / 160	40 / 80 / 100 / 160	40 - 100
Dynamic range vertical installation (Q_3/Q_1)	R		40	40	40	40	40

Nominal diameter	DN	mm	25	25	32	40	50(40[5])
Permanent flow rate	Q_3	m^3/h	10	10	10	16	16
MID approval number			TH-8814 / TH-8811	TH-8814 / TH-8811	TH-8814 / TH-8811	TH-8814 / TH-8811	TH-8814 / TH-8811
Approval typ name			D4 / Corona D4	D4 / Corona D4	D4 / Corona D4	D4 / Corona D4	D4 / Corona D4
Sanitary conformity			AoC DEU	AoC DEU	AoC DEU	AoC DEU	AoC DEU
Dynamic range horizontal installation (Q_3/Q_1)	R		40 - 160	40 - 160	40 - 160	40 - 100	40 - 100
Dynamic range vertical installation (Q_3/Q_1)	R		40	40	40	-	40

DIMENSIONS

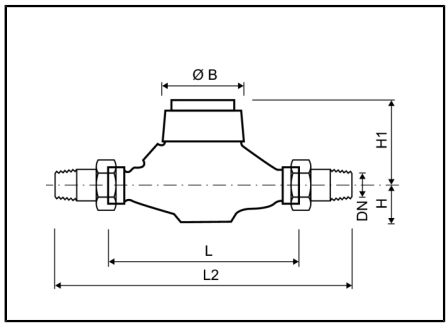

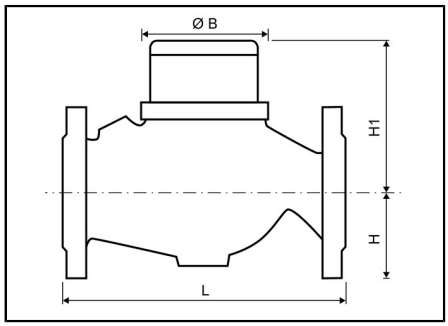

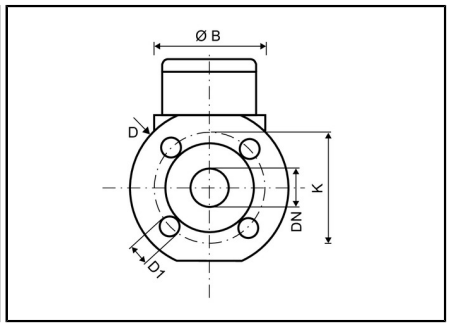

Nominal diameter	DN	mm	15	20	20	25	25
Permanent flow rate	Q_3	m^3/h	2.5	4	4	4	6.3
Overall length (DIN ISO 4064)	L	mm	165	190	165	175	260
Overall length with coupling[4]	L2	mm	245	288	263	269	378
Connection thread on meter (ISO228/1)		inch	G3/4B	G1B	G1B	G11/4B	G11/4B
Connection thread of coupling (DIN 2999)		inch	R1/2	R3/4	G3/4B	R1	R1
Flange diameter	D	mm	-	-	-	-	-
Hole circle diameter	K	mm	-	-	-	-	-
Screwhole diameter	D1	mm	-	-	-	-	-
Number of screwholes			-	-	-	-	-
Height	H	mm	33	37	37	49	44
Height	H1	mm	73	73	73	73	86
Diameter	ØB	mm	95	95	95	98	104
Weight without coupling		kg	1.3	1.4	1.4	1.8	2.08

Nominal diameter	DN	mm	25	25	32	40	50(40[5])
Permanent flow rate	Q_3	m^3/h	10	10	10	16	16
Overall length (DIN ISO 4064)	L	mm	260	175	260	300	300
Overall length with coupling[4]	L2	mm	378	295	378	438	-
Connection thread on meter (ISO228/1)		inch	G11/4B	G11/4B	G11/2B	G2B	-
Connection thread of coupling (DIN 2999)		inch	R1	R1	R11/4	R11/2	-
Flange diameter	D	mm	-	-	-	-	165
Hole circle diameter	K	mm	-	-	-	-	125
Screwhole diameter	D1	mm	-	-	-	-	18
Number of screwholes			-	-	-	-	4
Height	H	mm	44	50	44	46	83
Height	H1	mm	86	86	86	104	104
Diameter	ØB	mm	104	88	104	137	137
Weight without coupling		kg	2.8	2.1	3	5.4	10

[4] dependend on version of coupling

PRESSURE LOSS GRAPH / TYPICAL ERROR GRAPH

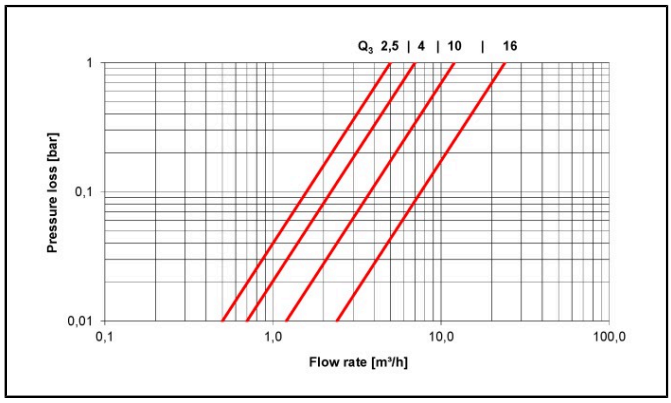

Pressure loss graph

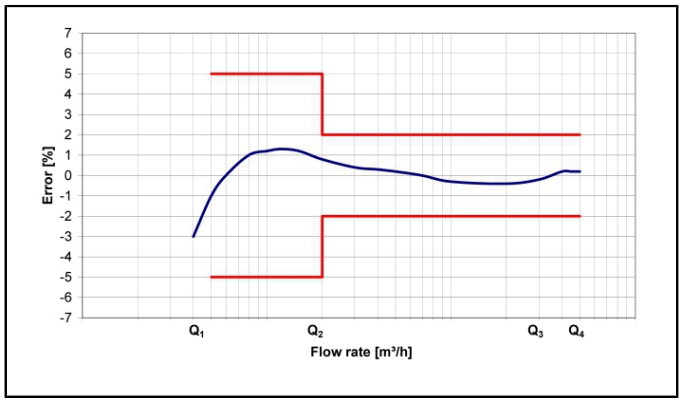

Typical error graph

GENERAL

			Meter for rising pipes
Medium temperature range		°C	0.1 ... +30
Temperature safety		°C	0.1 ... +50
Ambient operating temperature		°C	0.1 ... +55
Ambient storage temperature		°C	0.1 ... +55
Nominal pressure	PN	bar	16
Display range			0.05l ... 99,999 m^3
Protection class			IP 68

TECHNICAL DATA

Nominal diameter	DN	mm	25	40
Permanent flow rate	Q_3	m^3/h	10	16
Overload flow rate	Q_4	m^3/h	12.5	20
Transitional flow rate	Q_2	l/h	100	256
Minimum flow rate	Q_1	l/h	62.5[2]	160[1]
Starting flow rate		l/h	6-8	20-25
Pressure loss at Q_3		bar	0.6	0.6
Flow rate at 1 bar pressure loss		m^3/h	12	20

1 based on dynamic R 100
2 based on dynamic R 160

APPROVAL

Nominal diameter	DN	mm	25	40
Permanent flow rate	Q_3	m^3/h	10	16
MID approval number			TH-8814 / TH-8811	TH-8814 / TH-8811
Approval typ name			D4 / Corona D4	D4 / Corona D4
Sanitary conformity			AoC DEU	AoC DEU
Dynamic range horizontal installation (Q_3/Q_1)	R		40 - 160	40 - 100
Dynamic range vertical installation (Q_3/Q_1)	R		40	-

DIMENSIONS

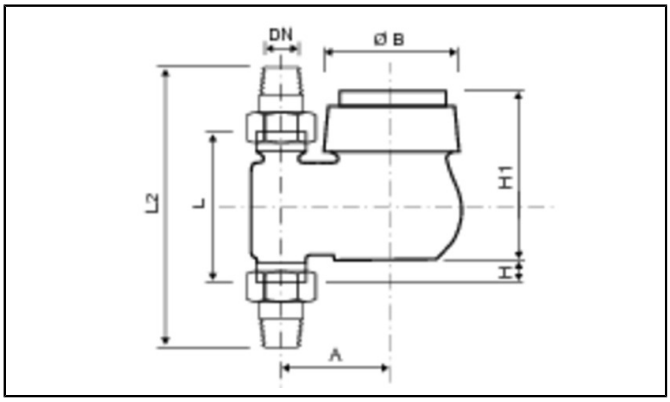

Nominal diameter	DN	mm	25	40
Permanent flow rate	Q_3	m^3/h	10	16
Overall length (DIN ISO 4064)	L	mm	150(135[3])	200(150[3])
Overall length with coupling[4]	L2	mm	268	338
Connection thread on meter (ISO228/1)		inch	G11/4B	G2B
Connection thread of coupling (DIN 2999)		inch	R1	R11/2
Flange diameter	D	mm	-	-
Hole circle diameter	K	mm	-	-
Screwhole diameter	D1	mm	-	-
Number of screwholes			-	-
Height	H	mm	31	21
Height	H1	mm	130	147
Diameter	ØB	mm	104	136
Weight without coupling		kg	3.2	6.3

3 spezial overall length on request

PRESSURE LOSS GRAPH / TYPICAL ERROR GRAPH

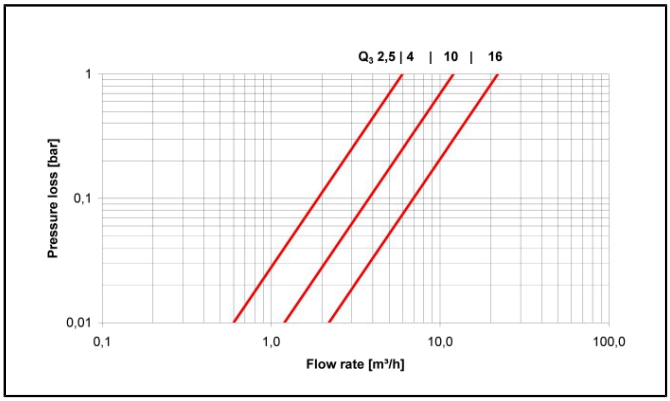

Pressure loss graph

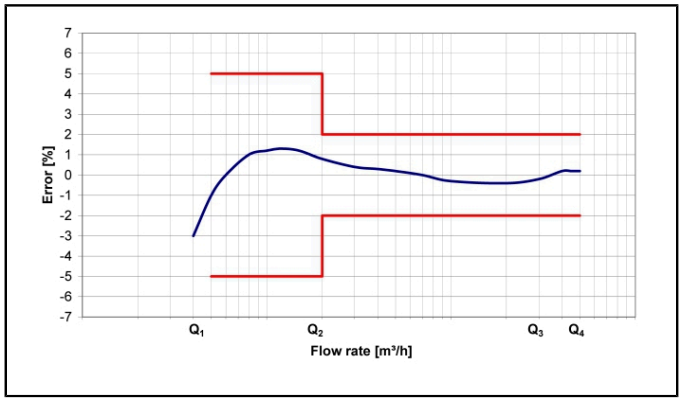

Typical error graph

Economic Actor Information

Applicable regulation and legal obligations for products may change.

DIEHL METERING monitors applicable regulation to ensure their products comply at the date of placing on the market.

Each economic actor making products available on the market thereafter must independently keep informed about the current applicable regulation.

For questions, please contact: metering-germany-info@diehl.com

Diehl Metering GesmbH
Hainburger Straße 33
A-1030 Vienna
Austria
Phone: +43 (0)1 716 70-0
Fax: +43 (0)1 716 70-12
metering-austria-info@diehl.com
www.diehl.com/metering

EMPOWER A SUSTAINABLE FUTURE