DIEHL
Metering

ALTAIR V4 DN25/32/40

ROTARY PISTON METER



APPLICATION

ALTAIR V4 is a volumetric meter developed within the framework of the MID and European standards to meet field requirements.
It is a particularly compact and robust meter, adapting to the most restrictive environments and compatible with varying water qualities.
Modular, ALTAIR V4 may be fitted at any time with an IZAR clip-on module converting it into a communicating meter, ready for mobile or fixed network (radio/wired) reading.

FEATURES

- DN 25 / 32 / 40
- Q_3 = 6.3 m^3/h (DN 25 / 32), Q_3 = 10 m^3/h (DN 25 / 32) and Q_3 = 16 m^3/h (DN 40)
- MID approval up to R = 800 (Q_3 = 6.3 m^3/h), R = 500 (Q_3 = 10 m^3/h) and R = 1,000 (Q_3 = 16 m^3/h)
- Starting flow rate at 1 l/h (Q_3 = 6.3 m^3/h), 2.9 l/h (Q_3 = 10 m^3/h) and 4 l/h (Q_3 = 16 m^3/h)
- Brass body
- Glass-copper register
- Compact
- Installation in any position

METROLOGICAL DATA

Nominal diameter	DN	mm	25	25	32	32	40
Length*	L	mm	260	260	260	260	300
Nominal flow rate	Q_3	m^3/h	6.3	10	6.3	10	16
R standard*	Q_3/Q_1		160	160	160	160	160
Starting flow rate		l/h	1	2.9	1	2.9	4
Minimum flow rate*	Q_1	l/h	39.375	62.5	39.375	62.5	100
Transitional flow rate*	Q_2	l/h	63	100	63	100	160
Overload flow rate	Q_4	m^3/h	7.875	12.5	7.875	12.5	20
Head loss at Q_3		bar	0.616	0.496	0.611	0.484	0.630
Head loss at Q_4		bar	0.962	0.776	0.955	0.785	0.984
Kvs (deltaP=Q^2/Kvs^2)			8.0	14.2	8.0	14.2	20.1

* Other values on request.

APPROVAL

	ALTAIR V4 DN25/32/40
MID approval	LNE-6250 I Type A2
Standards	EN 14154 I ISO 4064 I OIML R49
Sanitary conformity	ACS I Belgaqua I AoC DEU I WRAS I DM 174

REACH

Information pursuant to Article 33 (1) of Regulation (EC) No 1907/2006 of the European Parliament and of the Council of 18 December 2006:
This product series contains components with the following substances in a concentration of more than 0.1% weight by weight (w/w):
- Lead (CAS no.: 7439-92-1)

TEMPERATURES AND PRESSURE

			ALTAIR V4 DN25/32/40
Water temperature		°C	0.1 ... +50
Ambient operating temperature		°C	+1 ... +55
Storage temperature		°C	-10 ... +55
Nominal pressure	PN	bar	16

DIMENSIONS

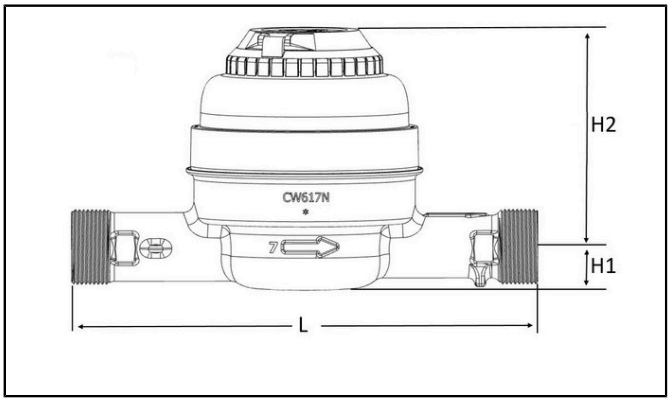

Front view - DN40

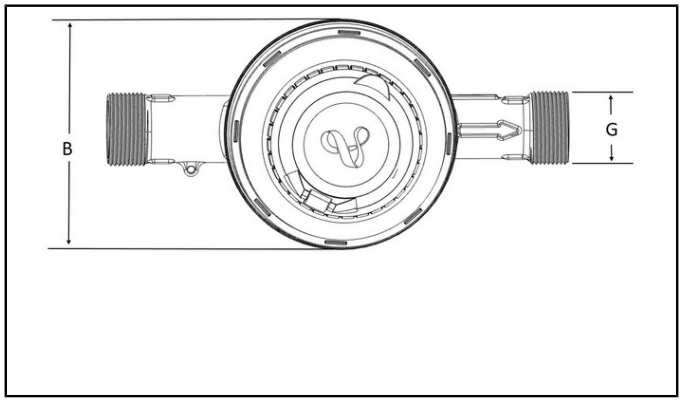

Top view

Nominal diameter	DN	mm	25	25	32	32	40
Length*	L	mm	260	260	260	260	300
Nominal flow rate	Q_3	m^3/h	6.3	10	6.3	10	16
Width	B	mm	132	179	132	179	179
Height	H1	mm	24.3	25.3	24.3	25.3	30.5
Height	H2	mm	120.3	153.5	120.3	153.5	153.5
Thread connections	G	inch	1"1/4	1"1/4	1"1/2	1"1/2	2"
Body			brass	brass	brass	brass	brass
Weight		kg	2.71	4.25	2.78	4.57	5.44

* Other values on request.

PRECISION CURVE - DN25/32

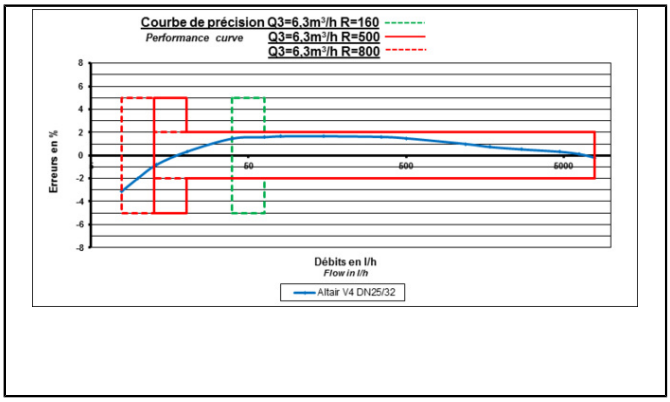

DN 25 / 32 - Q_3 = 6.3 m^3/h

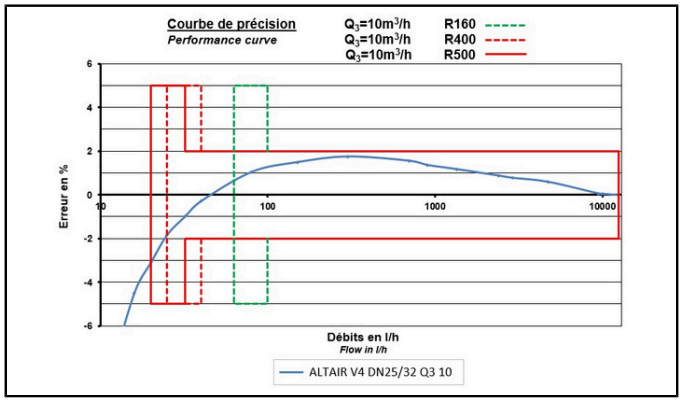

DN 40

This technology does not require straight length.

PRECISION CURVE - DN40

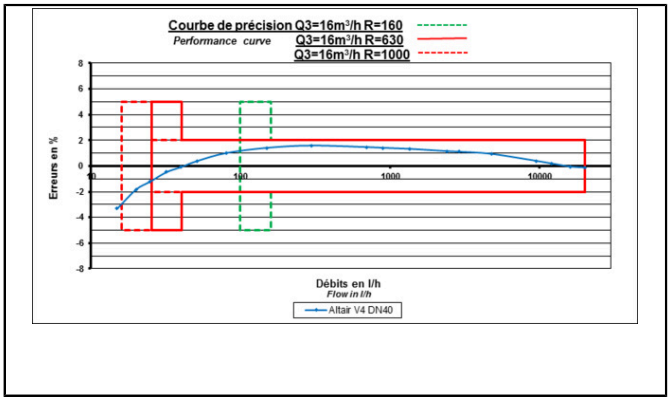

DN40 - Q_3=16 m^3/h

This technology does not require straight length.

OPTIONS

- Non-return valve
- Pair of connectors

Economic Actor Information

Applicable regulation and legal obligations for products may change.

DIEHL METERING monitors applicable regulation to ensure their products comply at the date of placing on the market.

Each economic actor making products available on the market thereafter must independently keep informed about the current applicable regulation.

For questions, please contact: metering-germany-info@diehl.com

Diehl Metering GmbH
Donaustraße 120
90451 Nürnberg
Germany
Phone: +49 911 6424-0
metering-germany-info@diehl.com
www.diehl.com/metering

EMPOWER A SUSTAINABLE FUTURE